Ergotron®

Dimensional & Range of Motion Illustrations

Tablet Cradle

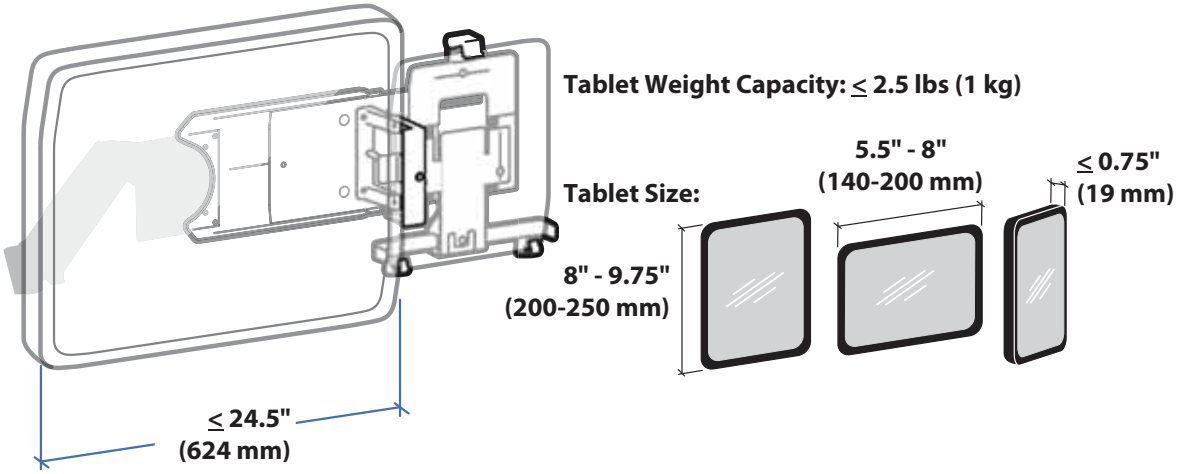

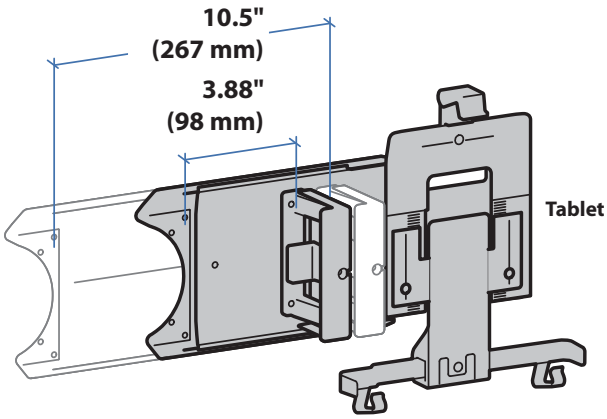

Tablet Cradle weighs 1.25lbs (0.57kg).

The Tablet Cradle Interface can be removed from the Cradle Extension and mounted to a VESA mount. The Tablet Cradle Interface without Extension weighs 0.55lbs (0.25kg).

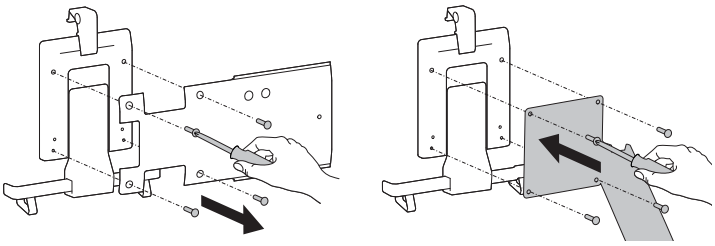

© 2011 Ergotron, Inc. rev. 05/09/2011 DIM-TabletCradle Content is subject to change without notification

Americas Sales and Corporate Headquarters	EMEA Sales	APAC Sale	Worldwide OEM Sales
St. Paul, MN USA (800) 888-8458 +1-651-681-7600 www.ergotron.com sales@ergotron.com	Amersfoort, The Netherlands +31 33 45 45 600 www.ergotron.com info.eu@ergotron.com	Tokyo, Japan www.ergotron.com apaccustomerservice@ergotron.com	www.ergotron.com info.oem@ergotron.com